Sailor

Sailor

INSTRUKTIONSBOG FOR SAILOR H1218

INSTRUCTION BOOK FOR SAILOR H1218

A/S S. P. RADIO · AALBORG · DENMARK

CONTENTS:

GENERAL DESCRIPTION
TECHNICAL DATA
CONTROLS
PRINCIPLE OF OPERATION
PROGRAMMING OF H1218
INSTALLATION
PIN CONFIGURATION
PARTS LISTS
COMPONENT LOCATIONS
MAIN DIAGRAM

GENERAL DESCRIPTION

SAILOR H1218 is a microprocessor controlled automatic radiotelephone keying device for ships' alarm and distress message with the facility of programming the call sign of the ship's station.

SAILOR H1218 will key:
1) The radiotelegraph alarm signal which consists of a series of 12 dashes.

2) The distress message which consists of:
   a) the distress signal SOS sent 3 times,

   b) the word DE,

   c) the call sign of the ship sent 3 times,

   d) two dashes for direction finding.

SAILOR H1218 will repeat the keying of the distress message after the required pause.

SAILOR H1218 has possibility for restricting the keying only to the distress message.

SAILOR H1218 ship's station call sign programming can easily be carried out with normal handtools, no instrument is required.

SAILOR H1218 has audio-visual indication of the keyed signal.

SAILOR H1218 can be used as a normally closed or normally opened key.

SAILOR H1218 can be connected with handkeys which will be cut off when the automatic key is activated.

SAILOR H1218 is supplied directly with 24V DC.

TECHNICAL DATA H1218

Mode of operation:	Alarm signal and/or distress message.
Alarm signal:	The alarm signal consists of a serie of 12 dashes, each of 4 seconds ±0.1 second, separated by spaces of 1 second ±0.1 second. On completion of the alarm signal the automatic keying device continue to key the distress message.
Distress message:	The distress message consists of: a) the distress signal SOS sent 3 times, b) the word DE, c) the ship's call sign sent 3 times, d) two dashes of 11.6 seconds ±0.1 second each with an interval of 1.5 second ±0.1 second.
Repetition time:	The distress message is repeated every eleven minute, until interruption or resetting.
Ship's call sign capacity:	Max. 7 characters (letters or numbers).
Keying speed:	10 bauds (approximately 13 words/min.). The duration of one dot (one bit) is 0.1 second ±0.01 second.
Keying time:	If the maximum number of characters (7 zeroes) is programmed the total duration of the distress message will be approximately 91 seconds.
External keying current:	Max. 1A ohmic load.
Operation temperature:	$-15^{o}C$ to $+55^{o}C$.
Power supply:	Voltage: 24V DC -10%, +30% Current: 0.4A Reverse polarity protection is incorporated. The unit does not earth either side of the supply.

CONTROLS

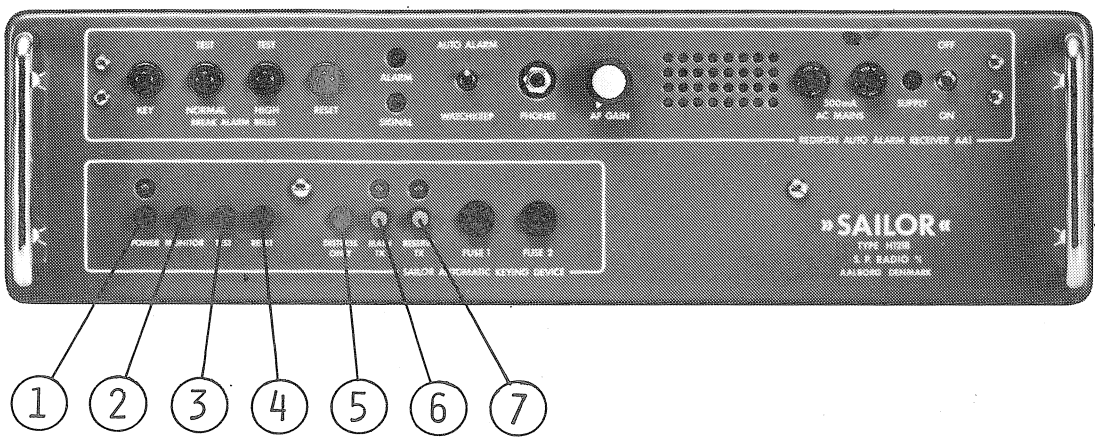

(1) POWER

Press POWER button to connect power supply with H1218.

(2) MONITOR

The built-in sound transducer will be activated by the automatic key after pressing the MONITOR button.

(3) TEST

For testing the Automatic Keying Device and the connected Auto Alarm Receiver press the TEST button. H1218 will then key the selected sequence (5) only to the Auto Alarm Receiver.
For monitoring press MONITOR button (2).

(4) RESET

When pressing the RESET button H1218 will momentarily stop in neutral position. When releasing the RESET button H1218 will start keying from the initial stage of the selected sequence (5).

(5) DISTRESS ONLY

While the DISTRESS ONLY button is pressed H1218 will only key the distress message. In released position H1218 will key the alarm signal followed by the distress message.

(6) MAIN TX

The main telegraph transmitter is keyed by H1218 in the selected mode (5) while the MAIN TX button is pressed. The signal lamp above the button is then activated by the automatic key.
For monitoring press MONITOR button (2).

(7) RESERVE TX

Operation as the MAIN TX button.

PRINCIPLE OF OPERATION

SAILOR Automatic Keying Device H1218 is to be connected to a transmitter like a handkey. H1218 replaces the handkey with a relay which is controlled by a microprocessor system.
See the schematic diagram.

Power is first applied to the system after a transmission switch has been activated. The CPU will then start executing the programme which is stored in the programme memory. One result of this is that H1218 will key: the alarm signal and/or the distress message depending on the manual selected sequence. When the ship's station call sign is to be keyed the CPU has to read the contents of the diode matric. The characters of the ship's station call sign is fetched from the matric by reading the contents of the columns one by one through the input/output controller.

By activating the RESET switch the microprocessor system stops momentarily, leaving the keying relay in its neutral position. When releasing the switch the CPU and input/output controller are resat and the keying will start from the initial stage of the selected sequence.

The MONITOR switch enables the sound transducer to be activated by the keying.

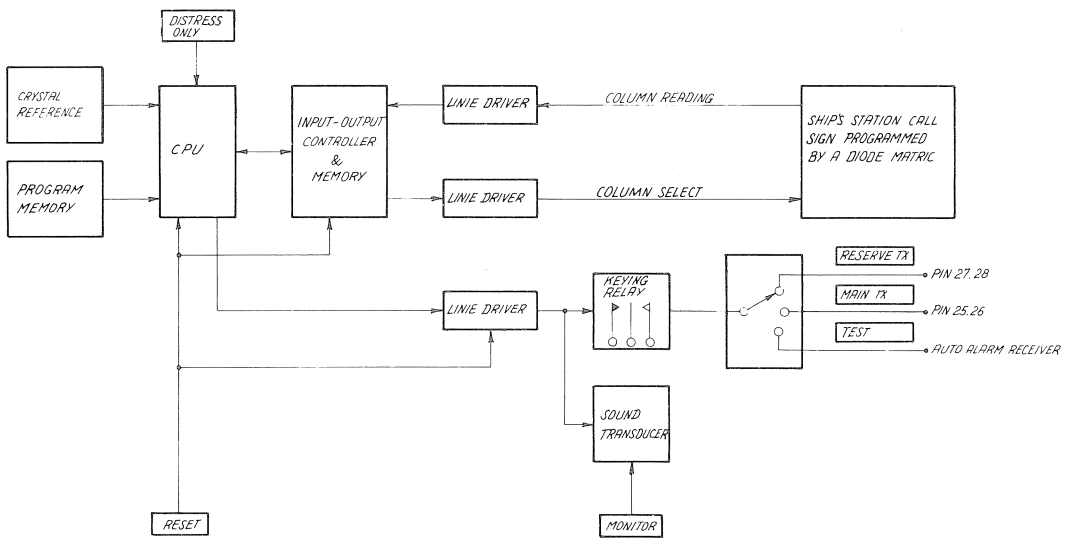

PROGRAMMING OF H1218

Programming of the Ship's Station Call Sign

The ship's station call sign is programmed by setting up a diode matric. The diodes are numbered by a letter (A to H) and a number (1 to 6). The letter indicates a column and the number indicates a row.

The programming is done by cutting out diodes in a column in accordance with the following table starting with the column marked by an "A". A cross in the table indicates which diodes that should be left on the printed circuit board.

After programming the call sign remember to program a space. Unused columns should be programmed for "Skip character" so that the keying time is kept to a minimum.

The figure shows the programming for keying OUWH.

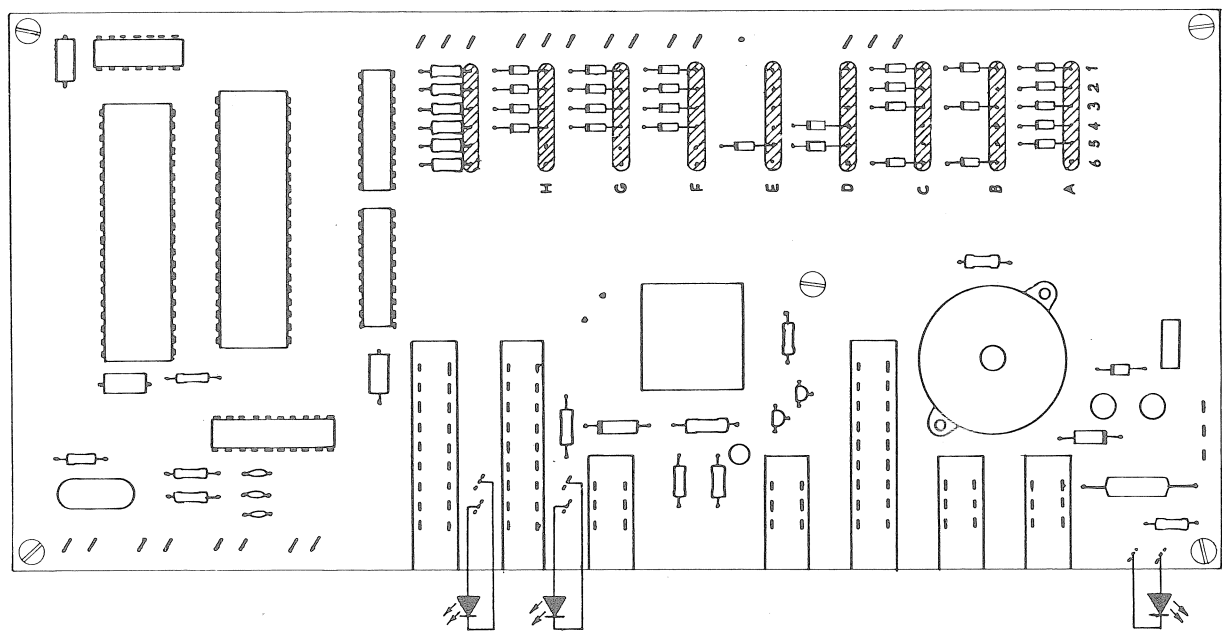

PROGRAMMING EXAMPLE

OUWH

CHARACTER SENT IN MORSE	DIODE ROW NO.					
	6	5	4	3	2	1
0						
1						X
2					X	
3					X	X
4				X		
5				X		X
6				X	X	
7				X	X	X
8			X			
9			X			X
A		X				X
B		X			X	
C		X			X	X
D		X		X		
E		X		X		X
F		X		X	X	
G		X		X	X	X
H		X	X			
I		X	X			X
J		X	X		X	
K		X	X		X	X
L		X	X	X		
M		X	X	X		X
N		X	X	X	X	
O		X	X	X	X	X
P	X					
Q	X					X
R	X				X	
S	X				X	X
T	X			X		
U	X			X		X
V	X			X	X	
W	X			X	X	X
X	X		X			
Y	X		X			X
Z	X		X		X	
SPECIAL						
.-.-.-	X		X		X	X
.-.-.	X		X	X		
Skip Character			X	X	X	X
Space		X				

H1218

INSTALLATION

The external connections to the SAILOR H1218 are attached to the rear contact board.

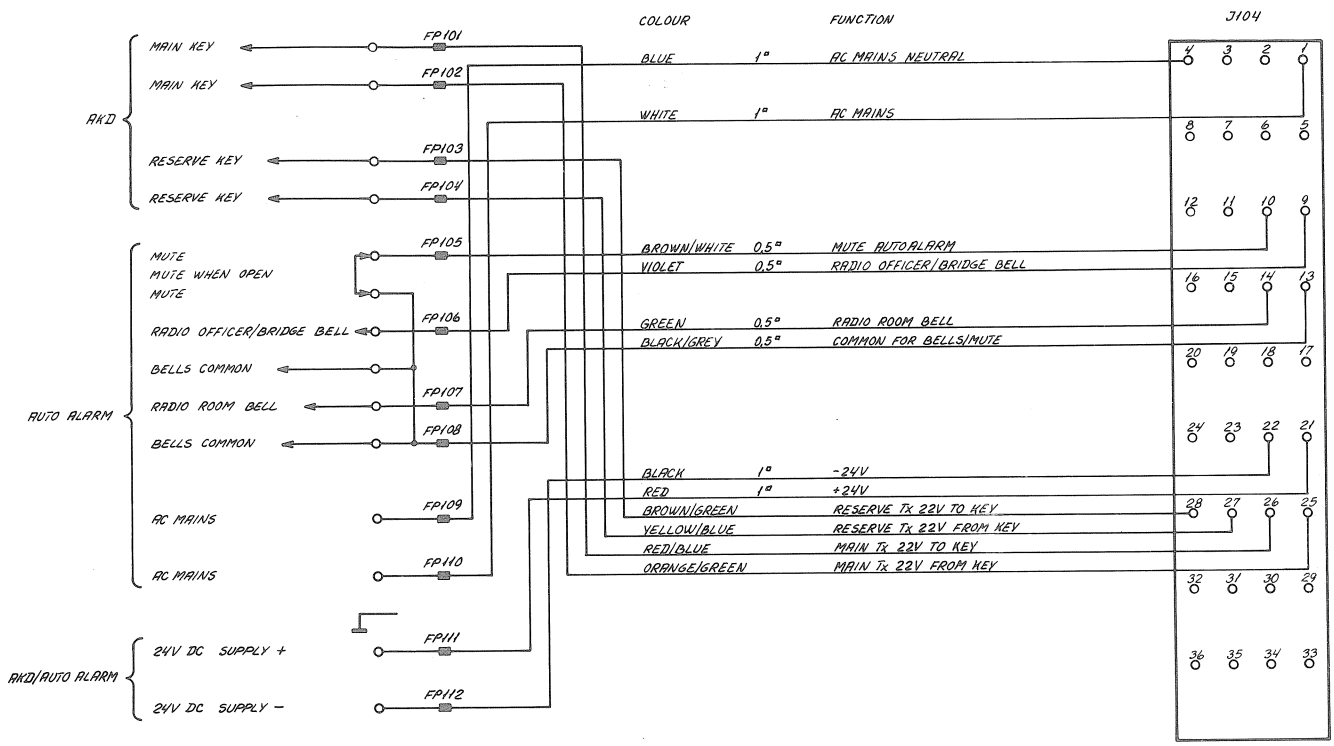

REAR CONTACTBOARD H1218

H1218A

AKD

Main key: The terminals are connected to the keying relay when the MAIN TX button is pressed.
The terminals are connected for normal open operation from the factory. A normal closed contact can be established by moving the orange/green wire to the soldering terminal called Main TX, 22V from key (BREAK) on the H1218 PCB.

Reserve key: The terminals are connected to the keying relay when the RESERVE TX button is pressed.
The terminals are connected for normal open operation from the factory. A normal closed contact can be established by moving the yellow/blue wire to the soldering terminal called Reserve TX, 22V from key (BREAK) on the H1218 PCB.

AUTO ALARM

Mute: The Auto Alarm Receiver is muted when the terminals are not short-circuited.

Bells: The external bells connection from the Auto Alarm Receiver are connected to these four terminals.
See instruction book for Auto Alarm Receiver for max. current.

AC MAINS: Connect AC power for the Auto Alarm Receiver to these two terminals.

AKD/AUTO ALARM

24V DC: Connect 24V DC supply for the AKD and Auto Alarm Receiver to these two terminals.

PIN CONFIGURATIONS

TOP VIEW

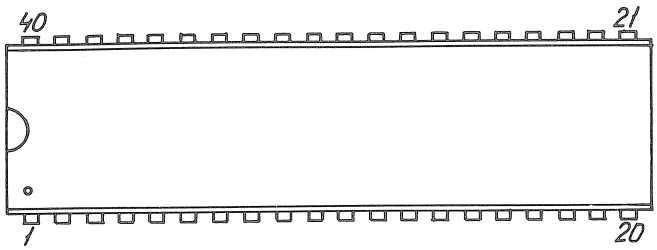

INS 8060 N

INS 8154 N

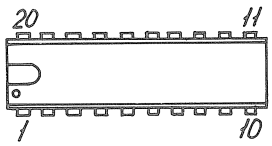

TBP 18S42N

SN 74 LS 241 N

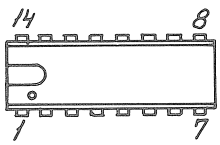

SN 74 LS 132 N

BOTTOM VIEW

BC 547

FRONT VIEW

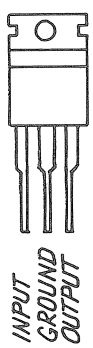

LM 7805 CT

H1218A

Symbol	Description	Manufact.	
R101	Resistor 4.7Kohm±5% 0.33W	Philips	2322 211 13472
R102	Resistor 1Mohm±5% 0.33W	Philips	2322 211 13105
R103	Resistor 1Kohm±5% 0.33W	Philips	2322 211 13102
R104	Resistor 18Kohm±5% 0.33W	Philips	2322 211 13183
R105	Resistor 47Kohm±5% 0.33W	Philips	2322 211 13473
R106	Resistor 330 Ohm±5% 0.5W	Philips	2322 212 13331
R107	Resistor 1Kohm±5% 0.5W	Philips	2322 212 13102
R108	Resistor 1.8Kohm±5% 0.33W	Philips	2322 211 13182
R109	Resistor 1.8Kohm±5% 0.33W	Philips	2322 211 13182
R110	Resistor 1.8Kohm±5% 0.33W	Philips	2322 211 13182
R111	Resistor 1.8Kohm±5% 0.33W	Philips	2322 211 13182
R112	Resistor 1.8Kohm±5% 0.33W	Philips	2322 211 13182
R113	Resistor 1.8Kohm±5% 0.33W	Philips	2322 211 13182
R114	Resistor 4.7Kohm±5% 0.33W	Philips	2322 211 13472
R115	Resistor 1Kohm±5% 0.33W	Philips	2322 211 13102
R116	Resistor 100Kohm ±5% 0.33W	Philips	2322 211 13104
R117	Resistor 180 Ohm±5% 0.33W	Philips	2322 211 13181
R118	Resistor 330 Ohm±5% 0.33W	Philips	2322 211 13331
R119	Resistor 12 Ohm±5% 4.2W	Philips	2322 330 22129
C101	Capacitor, ceramic 33pF±10% 500V	KCK	HM60SJSH330K
C102	Capacitor, ceramic 150pF±10% 50V	KCK	HE80SJSH151K
C103	Capacitor, polyester 470nF±10% 100V	Siemens	B32512- D1474K
C104	Capacitor, polyester 470nF±10% 100V	Siemens	B32512- D1474K
C105	Capacitor, polyester 470nF±10% 100V	Siemens	B32512- D1474K
C106	Capacitor, electrolytic 1uF ±20% 50V	ROE	EKI 00 AA 110H
C107	Capacitor, electrolytic 10uF±20% 35V	ROE	EKI 00 AA 210F
C108	Capacitor, electrolytic 47uF±20% 25V	ROE	EKI 00 BB 247E
C109	Capacitor, polyester 220nF±20% 100V	Philips	2222 344 24224
C110	Capacitor, ceramic 10nF+80-20% 50V	KCK	HE70SJYF103Z
D101	Diode, silicon	Motorola	1N4002
D102	Diode, silicon	Philips	1N4148
D103	Diode, silicon	Philips	1N4148
D104	Diode, silicon	Philips	1N4148
D105	Diode, silicon	Philips	1N4148
D106	Diode, silicon	Philips	1N4148
D107	Diode, silicon	Philips	1N4148
D108	Diode, silicon	Philips	1N4148
D109	Diode, silicon	Philips	1N4148
D110	Diode, silicon	Philips	1N4148
D111	Diode, silicon	Philips	1N4148

Symbol	*Description*	*Manufact.*	
D112	Diode, silicon	Philips	1N4148
D113	Diode, silicon	Philips	1N4148
D114	Diode, silicon	Philips	1N4148
D115	Diode, silicon	Philips	1N4148
D116	Diode, silicon	Philips	1N4148
D117	Diode, silicon	Philips	1N4148
D118	Diode, silicon	Philips	1N4148
D119	Diode, silicon	Philips	1N4148
D120	Diode, silicon	Philips	1N4148
D121	Diode, silicon	Philips	1N4148
D122	Diode, silicon	Philips	1N4148
D123	Diode, silicon	Philips	1N4148
D124	Diode, silicon	Philips	1N4148
D125	Diode, silicon	Philips	1N4148
D126	Diode, silicon	Philips	1N4148
D127	Diode, silicon	Philips	1N4148
D128	Diode, silicon	Philips	1N4148
D129	Diode, silicon	Philips	1N4148
D130	Diode, silicon	Philips	1N4148
D131	Diode, silicon	Philips	1N4148
D132	Diode, silicon	Philips	1N4148
D133	Diode, silicon	Philips	1N4148
D134	Diode, silicon	Philips	1N4148
D135	Diode, silicon	Philips	1N4148
D136	Diode, silicon	Philips	1N4148
D137	Diode, silicon	Philips	1N4148
D138	Diode, silicon	Philips	1N4148
D139	Diode, silicon	Philips	1N4148
D140	Diode, silicon	Philips	1N4148
D141	Diode, silicon	Philips	1N4148
D142	Diode, silicon	Philips	1N4148
D143	Diode, silicon	Philips	1N4148
D144	Diode, silicon	Philips	1N4148
D145	Diode, silicon	Philips	1N4148
D146	Diode, silicon	Philips	1N4148
D147	Diode, silicon	Philips	1N4148
D148	Diode, silicon	Philips	1N4148
D149	Diode, silicon	Philips	1N4148
D150	Diode, germanium	ITT	AA143
D151	Diode, zener 6,2V ±10% 0.4W	Philips	BZX 79 C6V2
D152	Diode, silicon	Motorola	1N4002

Symbol	*Description*	*Manufact.*	
T101	Transistor	Philips	BC547
T102	Transistor	Philips	BC547
IC101	Integrated circuit	Texas	SN74LS132N
IC102	Integrated circuit	National	INS8060N
IC103	Integrated circuit	National	INS8154N
IC104	Integrated circuit	Texas	TBP18S42N
IC105	Integrated circuit	Texas	SN74LS241N
IC106	Integrated circuit	Texas	SN74LS241N
X101	Crystal f = 1MHz	Croven	A3300RX-00
A101	Sound transducer	Sonitron	SM2
RE101	Relay	Danotherm	MS/K,BV749
S101	Switch	Schadow	11084 06003

Symbol	*Description*	*Manufact.*	
IC201	Voltage regulator	National	LM7805CT
LA201	Diode, light emitting	Xciton	XC5053Y
LA202	Diode, light emitting	Xciton	XC5053Y
LA203	Diode, light emitting	Xciton	XC5053Y
F201	Fuse time-lag 0.5A	ELU	5x20mm 0.5A
F202	Fuse time-lag 0.5A	ELU	5x20mm 0.5A
P201	Plug	Molex	03-06-1363

Symbol	*Description*	*Manufact.*	
C301	Capacitor, polyester 0.1uF ±20% 100V	Philips	2222 344 24104
C302	Capacitor, polyester 0.1uF ±20% 100V	Philips	2222 344 24104
C303	Capacitor, polyester 0.1uF ±20% 100V	Philips	2222 344 24104
C304	Capacitor, polyester 0.1uF ±20% 100V	Philips	2222 344 24104
C305	Capacitor, polyester 0.1uF ±20% 100V	Philips	2222 344 24104
C306	Capacitor, polyester 0.1uF ±20% 100V	Philips	2222 344 24104
C307	Capacitor, polyester 0.1uF ±20% 100V	Philips	2222 344 24104
C308	Capacitor, polyester 0.1uF ±20% 100V	Philips	2222 344 24104
FP301 to FP316	Ferrit bead	Kaschke	K3/1200/0.1Hz4/2/7A

Symbol	Description		Manufact.	
C401	Capacitor, ceramic 4.7nF	5KV	Ferroperm	9/0138.9
C402	Capacitor, ceramic 4.7nF	5KV	Ferroperm	9/0138.9
C403	Capacitor, polyester 0.1uF ±20%	100V	Philips	2222 344 24104
C404	Capacitor, polyester 0.1uF ±20%	100V	Philips	2222 344 24104
C405	Capacitor, polyester 0.1uF ±20%	100V	Philips	2222 344 24104
C406	Capacitor, polyester 0.1uF ±20%	100V	Philips	2222 344 24104
C407	Capacitor, polyester 0.1uF ±20%	100V	Philips	2222 344 24104
C408	Capacitor, polyester 0.1uF ±20%	100V	Philips	2222 344 24104
C409	Capacitor, polyester 0.1uF ±20%	100V	Philips	2222 344 24104
C410	Capacitor, polyester 0.1uF ±20%	100V	Philips	2222 344 24104
C411	Capacitor, polyester 0.1uF ±20%	100V	Philips	2222 344 24104
C412	Capacitor, polyester 0.1uF ±20%	100V	Philips	2222 344 24104
C413	Capacitor, polyester 0.1uF ±20%	100V	Philips	2222 344 24104
C414	Capacitor, polyester 0.1uF ±20%	100V	Philips	2222 344 24104
FP401 to FP422	Ferrit bead		Kaschke	K3/1200/0.1Hz4/2/7A
D401	Diode, silicon		Motorola	1N4002
RE401	Relay Takamizawa		ITT	LZ24H/LZ24/LZ24W

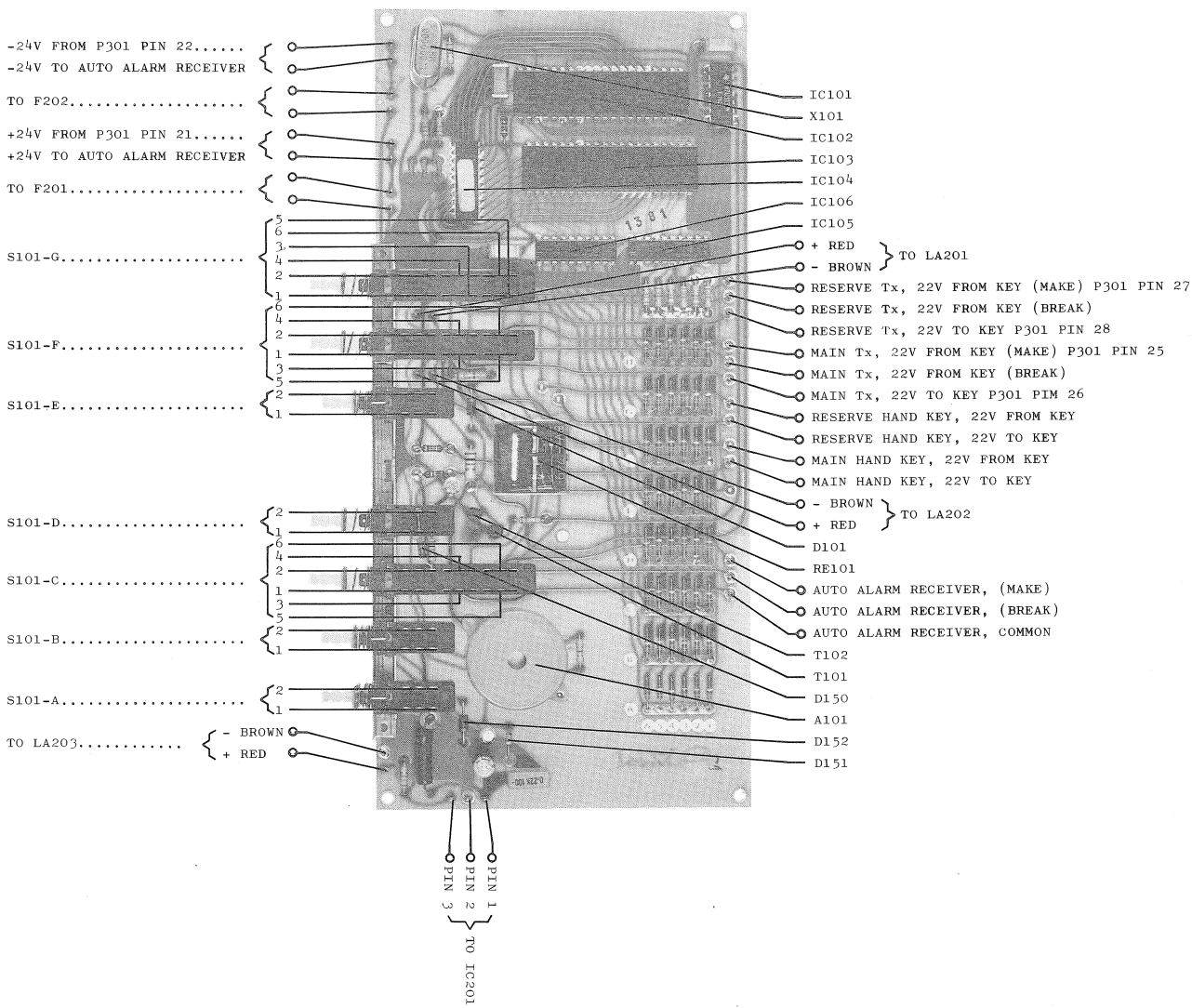
-24V FROM P301 PIN 22.....
-24V TO AUTO ALARM RECEIVER
TO F202.....
+24V FROM P301 PIN 21.....
+24V TO AUTO ALARM RECEIVER
TO F201.....
S101-G.....
S101-F.....
S101-E.....
S101-D.....
S101-C.....
S101-B.....
S101-A.....
TO LA203.....
- BROWN
+ RED
IC101
X101
IC102
IC103
IC104
IC106
IC105
+ RED
- BROWN
TO LA201
RESERVE Tx, 22V FROM KEY (MAKE) P301 PIN 27
RESERVE Tx, 22V FROM KEY (BREAK)
RESERVE Tx, 22V TO KEY P301 PIN 28
MAIN Tx, 22V FROM KEY (MAKE) P301 PIN 25
MAIN Tx, 22V FROM KEY (BREAK)
MAIN Tx, 22V TO KEY P301 PIM 26
RESERVE HAND KEY, 22V FROM KEY
RESERVE HAND KEY, 22V TO KEY
MAIN HAND KEY, 22V FROM KEY
MAIN HAND KEY, 22V TO KEY
- BROWN
+ RED
TO LA202
D101
RE101
AUTO ALARM RECEIVER, (MAKE)
AUTO ALARM RECEIVER, (BREAK)
AUTO ALARM RECEIVER, COMMON
T102
T101
D150
A101
D152
D151
PIN 3
PIN 2
PIN 1
TO IC201

Print H1218

MODIFICATION OF THE RESET-CIRCUIT

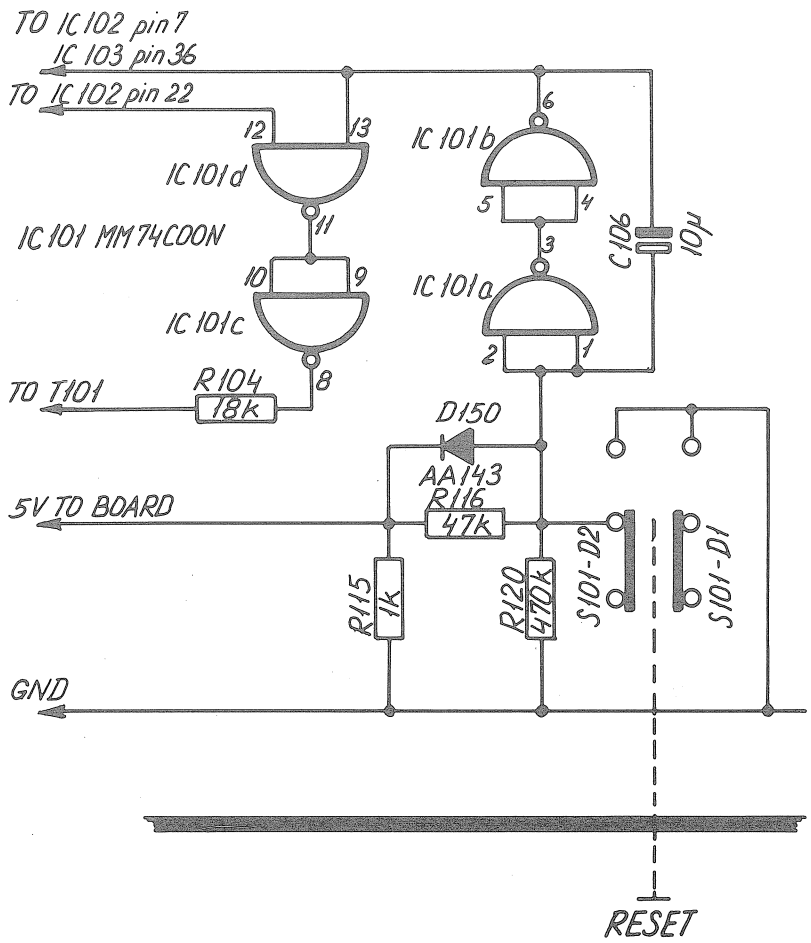

H1218

CORRECTION OF THE PARTS LIST

R116	Resistor	47 kohm ±5% 0.33W	Philips	2322 211 13473
R120	Resistor	470 kohm ±5% 0.33W	Philips	2322 211 13474
C106	Capacitor electrolytic	10 uF ±20% · 35V	ROE	EKI 00AA 210F
IC101	Integrated circuit		National	MM 74C00N

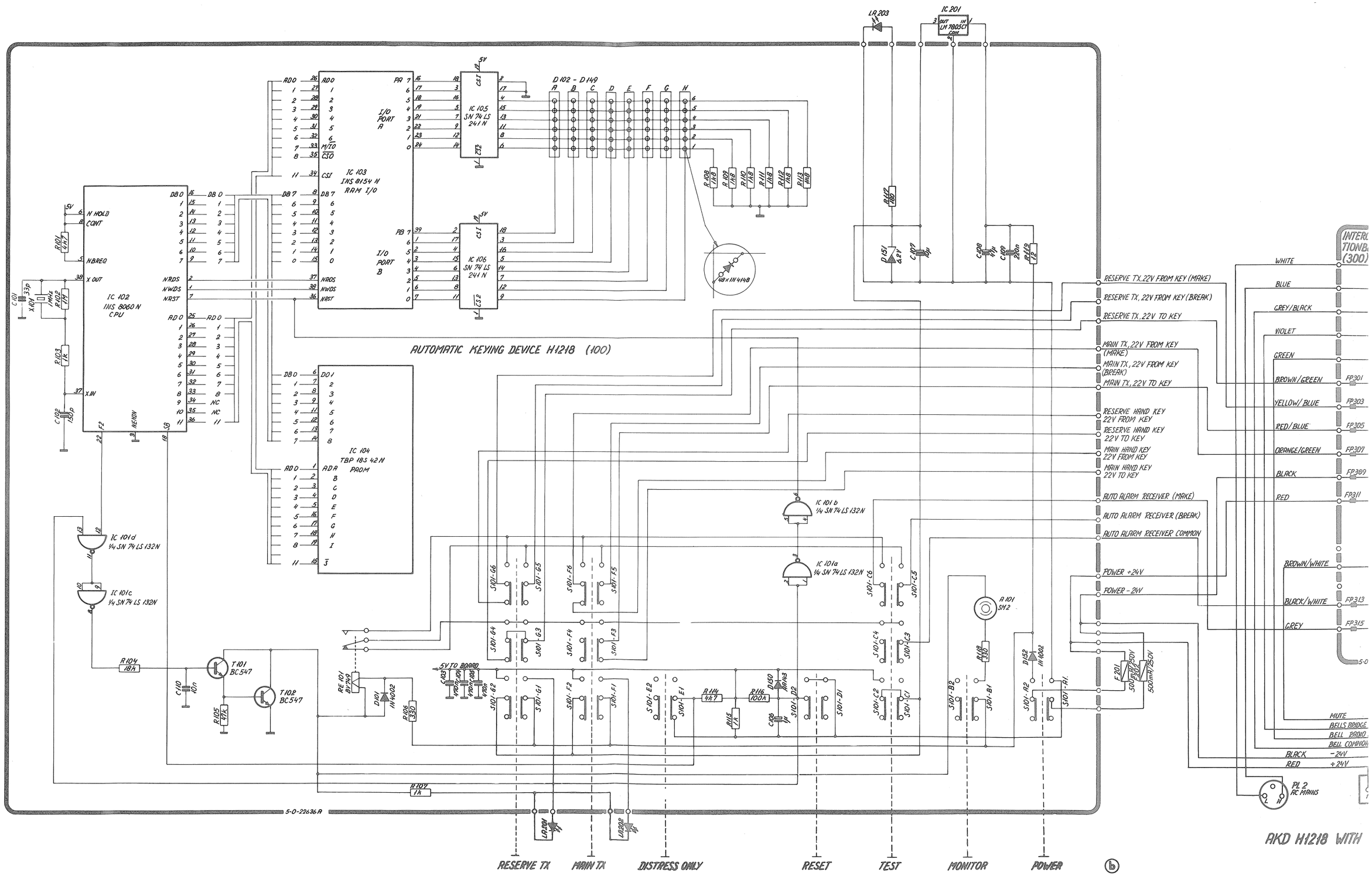
AUTOMATIC KEYING DEVICE H1218 (100)
IC 102 INS 8060 N CPU
IC 103 INS 8154 N RAM I/O
IC 104 TBP 18S 42 N PROM
IC 105 SN 74 LS 241 N
IC 106 SN 74 LS 241 N
IC 101 b 1/4 SN 74 LS 132N
IC 101 a 1/4 SN 74 LS 132N
IC 101 d 1/4 SN 74 LS 132N
IC 101 c 1/4 SN 74 LS 132N
IC 201 LM 7805CT
LA 203
D 102 - D 149
48 x 1N4148
T 101 BC 547
T 102 BC 547
A 101 SM2
PL 2 AC MAINS
RESERVE TX, 22V FROM KEY (MAKE)
RESERVE TX, 22V FROM KEY (BREAK)
RESERVE TX, 22V TO KEY
MAIN TX, 22V FROM KEY (MAKE)
MAIN TX, 22V FROM KEY (BREAK)
MAIN TX, 22V TO KEY
RESERVE HAND KEY 22V FROM KEY
RESERVE HAND KEY 22V TO KEY
MAIN HAND KEY 22V FROM KEY
MAIN HAND KEY 22V TO KEY
AUTO ALARM RECEIVER (MAKE)
AUTO ALARM RECEIVER (BREAK)
AUTO ALARM RECEIVER COMMON
POWER +24V
POWER -24V
WHITE
BLUE
GREY/BLACK
VIOLET
GREEN
BROWN/GREEN
YELLOW/BLUE
RED/BLUE
ORANGE/GREEN
BLACK
RED
BROWN/WHITE
BLACK/WHITE
GREY
MUTE
BELLS BRIDGE
BELL RADIO
BELL COMMON
BLACK -24V
RED +24V
5-0-22636A
RESERVE TX
MAIN TX
DISTRESS ONLY
RESET
TEST
MONITOR
POWER
AKD H1218 WITH

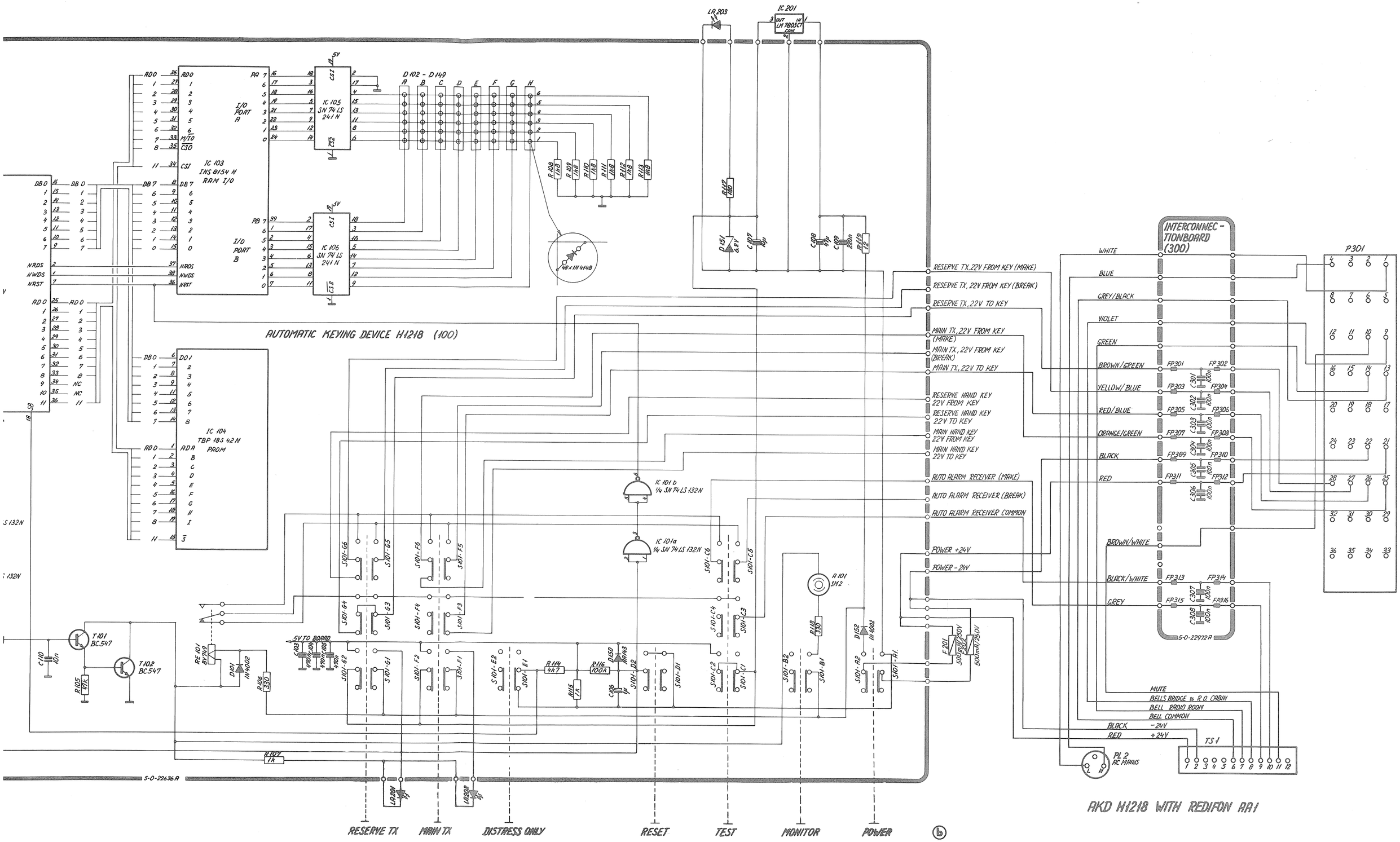
AUTOMATIC KEYING DEVICE H1218 (100)
IC 103 INS 8154 N RAM I/O
IC 104 TBP 18S 42 N PROM
IC 105 SN 74 LS 241 N
IC 106 SN 74 LS 241 N
D 102 - D 149
48 x 1N 4148
IC 201 LM 7805CT
LA 203
IC 101 b 1/4 SN 74 LS 132N
IC 101a 1/4 SN 74 LS 132N
A 101 SM2
T101 BC547
T102 BC547
RE 101 BV749
5V TO BOARD
5-0-22636A
RESERVE TX
MAIN TX
DISTRESS ONLY
RESET
TEST
MONITOR
POWER
RESERVE TX, 22V FROM KEY (MAKE)
RESERVE TX, 22V FROM KEY (BREAK)
RESERVE TX, 22V TO KEY
MAIN TX, 22V FROM KEY (MAKE)
MAIN TX, 22V FROM KEY (BREAK)
MAIN TX, 22V TO KEY
RESERVE HAND KEY 22V FROM KEY
RESERVE HAND KEY 22V TO KEY
MAIN HAND KEY 22V FROM KEY
MAIN HAND KEY 22V TO KEY
AUTO ALARM RECEIVER (MAKE)
AUTO ALARM RECEIVER (BREAK)
AUTO ALARM RECEIVER COMMON
POWER +24V
POWER -24V
INTERCONNECTIONBOARD (300)
WHITE
BLUE
GREY/BLACK
VIOLET
GREEN
BROWN/GREEN
YELLOW/BLUE
RED/BLUE
ORANGE/GREEN
BLACK
RED
BROWN/WHITE
BLACK/WHITE
GREY
P301
5-0-22972A
MUTE
BELLS BRIDGE & R.O. CABIN
BELL RADIO ROOM
BELL COMMON
BLACK -24V
RED +24V
TS 1
PL 2 AC MAINS
AKD H1218 WITH REDIFON AA1

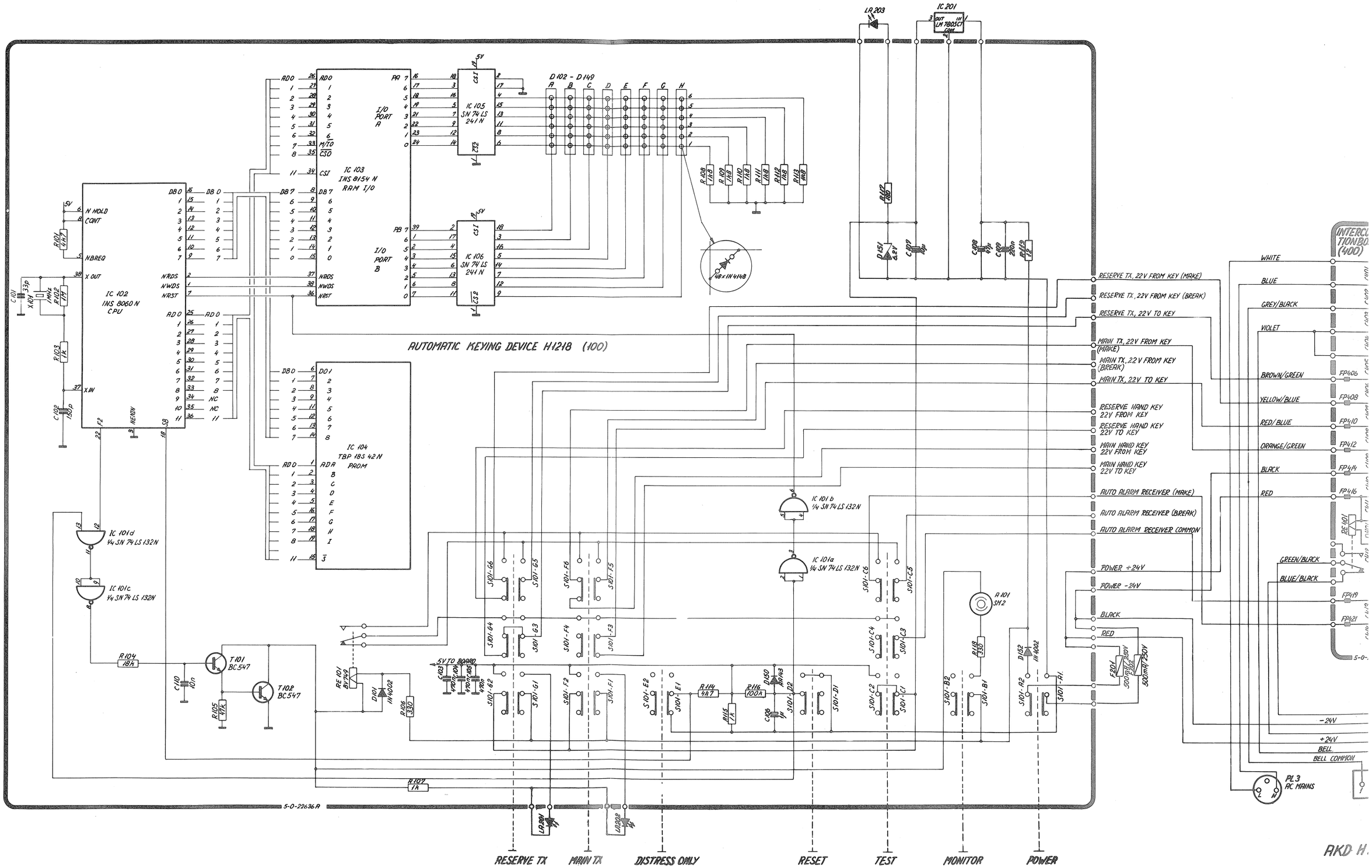
AUTOMATIC KEYING DEVICE H1218 (100)
IC 102
INS 8060 N
CPU
IC 103
INS 8154 N
RAM I/O
IC 104
TBP 18S 42 N
PROM
IC 105
SN 74 LS
241 N
IC 106
SN 74 LS
241 N
D 102 - D 149
48 x IN 4148
IC 201
LM 7805CT
LA 203
IC 101 b
1/4 SN 74 LS 132N
IC 101a
1/4 SN 74 LS 132N
IC 101d
1/4 SN 74 LS 132N
IC 101c
1/4 SN 74 LS 132N
T 101
BC 547
T 102
BC 547
A 101
SM 2
RESERVE TX, 22V FROM KEY (MAKE)
RESERVE TX, 22V FROM KEY (BREAK)
RESERVE TX, 22V TO KEY
MAIN TX, 22V FROM KEY (MAKE)
MAIN TX, 22V FROM KEY (BREAK)
MAIN TX, 22V TO KEY
RESERVE HAND KEY 22V FROM KEY
RESERVE HAND KEY 22V TO KEY
MAIN HAND KEY 22V FROM KEY
MAIN HAND KEY 22V TO KEY
AUTO ALARM RECEIVER (MAKE)
AUTO ALARM RECEIVER (BREAK)
AUTO ALARM RECEIVER COMMON
POWER +24V
POWER -24V
BLACK
RED
WHITE
BLUE
GREY/BLACK
VIOLET
BROWN/GREEN
YELLOW/BLUE
RED/BLUE
ORANGE/GREEN
BLACK
RED
GREEN/BLACK
BLUE/BLACK
-24V
+24V
BELL
BELL COMMON
PL 3
AC MAINS
5-0-22636 A
RESERVE TX
MAIN TX
DISTRESS ONLY
RESET
TEST
MONITOR
POWER

AUTOMATIC KEYING DEVICE H1218 (100)

IC 103 INS 8154 N RAM I/O

IC 104 TBP 18S 42 N PROM

IC 105 SN 74 LS 241 N

IC 106 SN 74 LS 241 N

IC 101 b 1/4 SN 74 LS 132 N

IC 101 a 1/4 SN 74 LS 132 N

IC 201 LM 7805 CT

D 102 - D 149

48 x IN 4148

RESERVE TX, 22V FROM KEY (MAKE)
RESERVE TX, 22V FROM KEY (BREAK)
RESERVE TX, 22V TO KEY
MAIN TX, 22V FROM KEY (MAKE)
MAIN TX, 22V FROM KEY (BREAK)
MAIN TX, 22V TO KEY
RESERVE HAND KEY 22V FROM KEY
RESERVE HAND KEY 22V TO KEY
MAIN HAND KEY 22V FROM KEY
MAIN HAND KEY 22V TO KEY
AUTO ALARM RECEIVER (MAKE)
AUTO ALARM RECEIVER (BREAK)
AUTO ALARM RECEIVER COMMON
POWER +24V
POWER -24V
BLACK
RED

INTERCONNECTIONBOARD (400)

WHITE
BLUE
GREY/BLACK
VIOLET
GREEN
BROWN/GREEN
YELLOW/BLUE
RED/BLUE
ORANGE/GREEN
BLACK
RED
BROWN/WHITE
GREEN/BLACK
BLUE/BLACK
-24V
+24V
BELL
BELL COMMON

P 301

PL 2

PL 3 AC MAINS

RESERVE TX
MAIN TX
DISTRESS ONLY
RESET
TEST
MONITOR
POWER

5-0-22636 A
5-0-22972 A

AKD H1218 WITH ITT AA-734